VZ LINK magazine

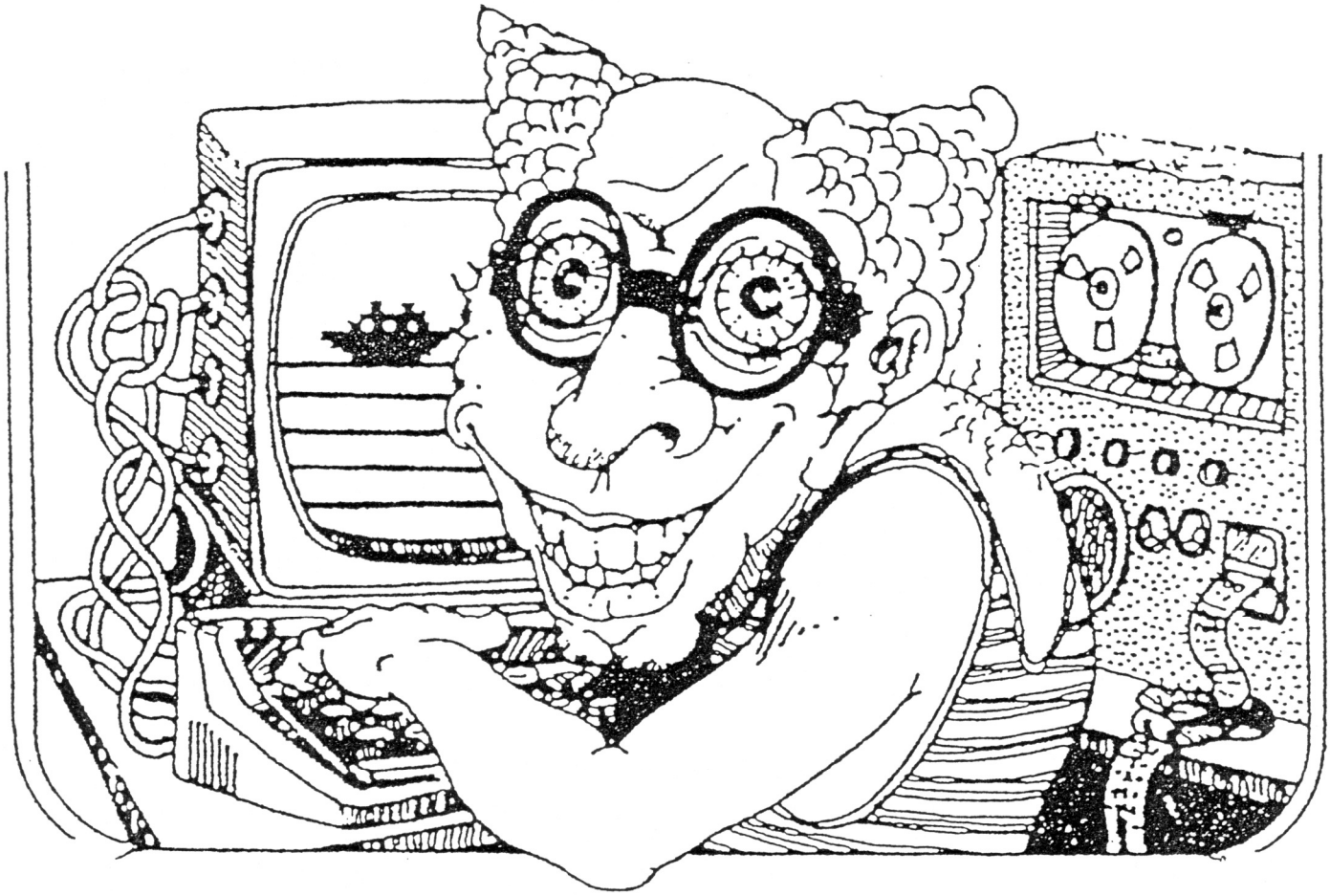

ISSUE 57 JULY 1991

New Zealand VZ 300/200 Computer users club

ODDS AND ENDS

Hi, Well we finally managed to get out the JULY issue of your VZ newsletter.
Better late than never I guess.
I was really pleased with the turnout at the last club meeting.
Thank you to all those that made the effort. It is a shame we don't see more of the other members at these meetings.
Thanks also to Laurie Whetton for showing us how Disk Drives can be aligned using the right equipment. Laurie has offered to organise a session where we can all have our Disk Drives done.

REMEMBER

If you want to contact me about any problems the phone number is now: Ph. 520-6743
If it is really urgent you can contact me at work, the number is now: Ph. 270-5389

QUIRK ???

In VZ LINK issue #53 (Mar 1991) I mentioned that a Disk formatting Bug was showing up between the New and Old Dos Rom.
I am pleased to report that this 'BUG' has been successfully exterminated!!.
It appears that the real 'BUG' was the differing alignment of the Disk Drives.

CLUB MEETING

The remaining club meetings for the year will be now be held on :-

>>>>>>>>>>>>>>>>>>>> SATURDAY 14 SEPTEMBER 1991 <<<<<<<<<<<<<<<<<<<<<<<<
>>>>>>>>>>>>>>>>>>>> SATURDAY 30 NOVEMBER 1991 <<<<<<<<<<<<<<<<<<<<<<<<
>>>>>>>>>>>>>>>>>>>> Starting at 10.00 am. <<<<<<<<<<<<<<<<<<<<<<<<

These dates will be confirmed closer to the time, but please mark them on you calendar. It would be really good to get a 50% turnout at least once this year.

THE VZ LINK ELECTRONIC INDEX

Our Potpourri this month advertises the long awaited electronic index, as stated the full instructions are on the disk. However if you don't have a printer then a hard copy of the instructions will be provided.
I feel that this programme must surely be the best thing to happen, as far as utilities is concerned, for some time. To have all the info available at the spin of a disk will make live easy.

The cost per volume is only $4.50 for either Disk or Tape.
Currently two volumes are available, which will give you the full index up to December 1991.
All proceeds from the sale of the Electronic Index will go toward the clubs funds.

FOR SALE

Steelo Lemon soap pads, box of 10 for $1.00
Cassette Leads approx 1 metre long for $7.00 each (suppled by Ken Clarke)
Disks for $1.00 each /Cassettes for $2.00 each.
All proceeds to club funds.

CLUB FUNDS

There are still a lot of out standing subscriptions due. If yours is one of them please forward it as soon as possible. The club relies on these to continue the newsletters. If you are not sure when and if yours is due contact me and I will tell you.
Please support the club by making a purchase of either the index or other items we have available. I would like to have $100.00 spare in club funds to purchase a complete set of VZ articles as compiled by Bob Kitch.

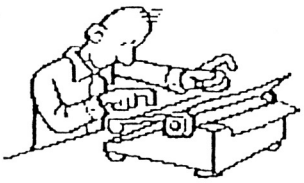

Potpourri

by

Ken Clarke.

A potpourri of ideas, software modifications, help-line, your ideas, suggestions, gripes, where to find it, cheats, pokes and infinite lives, adventure gaming help-line, hardware help in construction, or in fact anything that other VZ'ers could be interested in or be able to find help for you.....

Bells and Whistles of a Madman! Or maybe not so daft! Ever consider an ELECTRONIC INDEX for the 'VZ LINK' on a VZ Data Base with full sorting facilities to boot? How many times have you had to plough through many, many back numbers of 'VZ LINK' just to find something you can't quite remember in which issue it was? You've had the experience too?

Well help is now at hand. I've set up just such a Data Base. I have given the 'fields' [columns] headings and sub-headings that will allow for example, the easy location of Technical Articles, Arcade Games, Hints and Kinks, Adventure Games, Reviews, Amateur Radio, Circuits, etc. Finding items in an issue of 'VZ LINK' in a fraction of the time it would take doing the searching manually, makes it a 'breeze'!

Want a printed index of all the Utility Programmes, or a printed index of all the articles or programmes of a particular Author....? It is even possible to print a yearly or even a month by month index for each issue.

Full instructions for use are included on the Disk/Tape. [The E&F (or other compatible) Word Processor is used to print your own Operator's Manual.]

As a BONUS, with the purchase of the 'VZ LINK ELECTRONIC INDEX' a FREE copy of the "DATA BASE" is included, and this can also be used for any other data base you may care to set up.

8K BUILT IN BATT. RAM BY JOE LEON

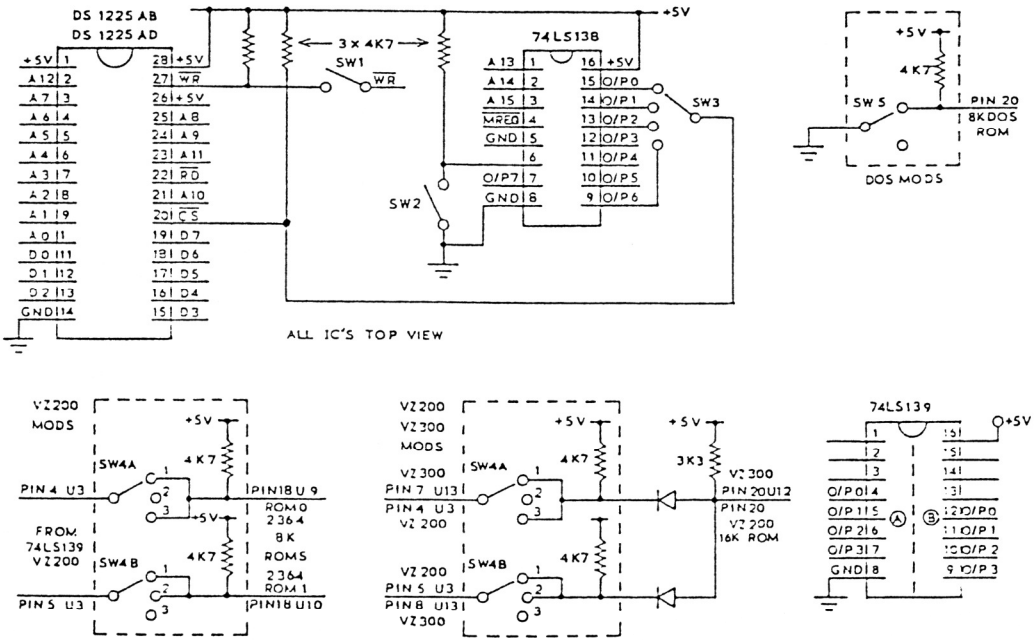

8K BUILT IN BATT. RAM CONT. . .

The 2K ZERO Power Ram featured in issue # has it's uses. It fills up the 2K gap nicely left by the DOS. One of it's limitations is the small memory size available. This article deals with an 8K version. Like the 2K one the 8K Ram also has Built In LITHIUM Batteries and will be refered to as 8K BIB (Built In Batteries) Ram. Data rentention in the absence of power is over 10 years after which it behaves like a normal CMOS Ram.

Non Disk Drive owners will most likely put the 2 Rams in the 10K Cart. area. Although the 8K BIB Ram can be used there it can be put to more productive work.

This 8K BIB Ram will prove to be most useful in activating all the hidden commands/functions in the Basic Roms or enhancing the DOS. Imagine being able to change at will any command or routine or replace them with your own. The Basic and DOS Roms are full of bugs which persons who know how will be able to fix.

Before proceeding with the article I would like to point out that you'll need the Technical Reference Manual for reference and trouble shooting. And now to the project. There are five circuits although two are very similiar and we'll deal with each one in turn.

8K BIB RAM CIRCUIT :-

The 74LS138 is configured to decode in 8K blocks. Using SW3 (Switch 3) you can place the 8K BIB Ram in the following memory locations. 0000H-1FFFH (Rom 0), 2000H-3FFFH (Rom 1), 4000H-5FFFH (Dos Rom) and at C000H-DFFFH.

If you have a VZ200 then you may have to select a lower O/P than O/P 6. the idea of having the 8K BIB Ram at higher memory is to be able to transfer the contents of one of the 3 lower 8K blocks for modification. Then when it's done, switch out one of the 8K blocks and switch in the 8K BIB Ram in it's place for testing.

Switch 1 is the WRITE ENABLE/DISABLE Switch. Close to WRITE, Open to WRITE PROTECT.

Switch 2 is optional. It allows you to disable the 8K BIB Ram. Close to disable, Open to enable.

VZ200 MODS CIRCUIT :-

MOST VZ200's have 2X8K Basic Roms. These will have to be disabled or enabled in turn as shown in the diagram. For both Roms the CS (Chip Select) line must be cut and the circuit within the broken line box inserted. Switch 4 is Double Pole Triple Throw type.

Switch position 1 - Rom 0 and Rom 1 are enabled.
Switch position 2 - Rom 0 is disabled and Rom 1 is still enabled.
Switch position 3 - Rom 0 is re-enabled while Rom 1 is disabled.

NOTE :- Any switching must be done with the power off except for Switch 1 which can be used any time.

8K BUILT IN BATT. RAM CONT. . .

VZ 200/300 MODS :-

This circuit is for VZ 200/300 with 16K Roms. The decoder (U3-74LS139) in VZ200 and (U13) in VZ300 send out Rom 0 and Rom 1 CS signals. They are ANDed together by the DIODE AND GATE which is fed into the CS input pin of the 16K Rom. The same switch arrangement as with the previous mod. applies. No tracks have to be cut as it is easier to unsolder one end of the DIODE and make your connections to that end making sure it is the correct end. In the vacated hole from the DIODE you can put in the switch lead.

DOS MOD :-

This is even simpler to achieve. Cut the track between pin 20 of the 8K Rom and Ground and insert Resistor and Switch as shown in the circuit.

U3 - 74LS139 VZ200 DECODER :-

Unlike the 74LS138 this is a Dual Decoder. I labelled each half 'A' and 'B' respectively. Side 'A' is configured to decode in 8K blocks while side 'B' decodes in 2K blocks.

Before proceeding further a bit of an explanation on decoding and CS (Chip Select) about which I had some enquiries. I'll use the 74LS138 as an example.

The INPUTS decide what size blocks it will decode in. Starting with O/P 0 to O/P 7 each O/P goes to zero volts in turn activating each Ram/Rom the O/P's are connected to. Only one Ram/Rom can be active at any one time. The CS select pin has to be taken to zero volts to activate the particular Ram/Rom. So inversely if we want to deactivate a Ram/Rom we can use a pull up resitor to +5V as shown in the circuits.

In the tables below the addresses are given for each decoded block for both the 74LS138 and 74LS139 decoders.

74LS138 decoder	74LS139 decoder
O/P 0 - 0000H-1FFFH (ROM 1)	O/P 0 - 0000H-1FFFH (ROM 1)
O/P 1 - 2000H-3FFFH (ROM 2)	O/P 1 - 2000H-3FFFH (ROM 2)
O/P 2 - 4000H-5FFFH (DOS ROM)	O/P 2 - 4000H-5FFFH (DOS ROM)
O/P 3 - 6000H-7FFFH	O/P 3 = 6000H-7FFFH - Side A ↑
O/P 4 - 8000H-9FFFH	O/P 0 - 6000H-67FFH - Side B
O/P 5 - A000H-BFFFH	O/P 1 - 6800H-6FFFH - Side B
O/P 6 - C000H-DFFFH	O/P 2 - 7000H-77FFH - Side B
O/P 7 - E000H-FFFFH	O/P 3 - 7800H-7FFFH - Side B

The 74LS139 in the VZ200 has two unused outputs of particular interest to us.

O/P 1 - Pin 6, side A - 4000H-5FFFH (8K Block)
O/P 2 - Pin 12, side B - 6000H-67FFH (2K Block)

You'll notice that's the 10K Cartidge area. I used the 2K decoded O/P for the 2K Zero Power Ram as described in last issue which saved me building a decoder. I'm lazy, if it's already there I'll use. Why reinvent the wheel. Happy hacking.

LIVEN-UP

ANIMATION AND GRAPHICS ..... PART TWO

By Bob Kitch

```
0001 ;
0002 ;SOURCE:MOVE
0003 ;ORIGIN:0BC00H
0004 ;OBJECT:MOVEUP
0005 ;
0006 ;SCREEN REPLACEMENT SUBS.
0007 ;  BY BOB KITCH.
0008 ;    25/APR./89
0009 ;
0010 ;
0011 ;
0012 ;
0013 VRAM EQU  7000H
0014 ;START OF VIDEO SCREEN.
0015 SSCN EQU  0B200H
0016 ;START OF SCREEN BUFFER.
0017 SZSC EQU  0800H
0018 ;SIZE OF SCREEN.
0019 HSZC EQU  0400H
0020 ;HALF SIZE SCREEN.
0021 ESCN EQU  SSCN+SZSC
0022 ;END OF SCREEN BUFFER + 1.
0023 LLEN EQU  20H
0024 ;LINE LENGTH IN BYTES.
0025 NLIN EQU  40H
0026 ;NUMBER OF LINES.
0027 BIG  EQU  0FFFFH+1
0028 ;EQ. TO 65536D.
0029 ZERO EQU  00H
0030 ;ZERO FOR OFFSETS.
0031 SBF1 EQU  0C000H
0032 ;START OF PICTURE BUFFERS.
0033 SBF2 EQU  SBF1+SZSC
0034 SBF3 EQU  SBF2+SZSC
0035 SBF4 EQU  SBF3+SZSC
0036 SBF5 EQU  SBF4+SZSC
0037 SBF6 EQU  SBF5+SZSC
0038 SBF7 EQU  SBF6+SZSC
0039 SBF8 EQU  SBF7+SZSC
0040 DLAY EQU  4038H
0041 ;DELAY ROUTINE IN DOS.
0042 DURD EQU  22H
0043 ;DELAY DURATION IN MSEC.
0044 TURN EQU  0C9H
0045 ;OPCODE FOR RETURN.
0046 JMP  EQU  0C3H
0047 ;OPCODE FOR JUMP.
0048 IVEC EQU  787DH
0049 ;3 BYTE INTERRUPT VECTOR.
0050 ;
0051 ;
0052 ;JUMP TABLE FOR 9 PIC MOVES.
0053 STRT JP   SC0
0054      JP   SC1
0055      JP   SC2
0056      JP   SC3
0057      JP   SC4
0058      JP   SC5
0059      JP   SC6
0060      JP   SC7
0061      JP   SC8
0062 ;
0063 ;
0064 ;SCREEN 0 - SPLAT.
0065 SC0  CALL SAVR
0066 ;SAVE REGISTERS.
0067      LD   HL,SBF1
0068 ;SOURCE - START OF BUFFER.
0069      LD   DE,SSCN
0070 ;DEST - START OF SCREEN.
0071      LD   BC,SZSC
0072 ;SIZE - SCREEN FULL.
0073      LDIR
0074 ;MOVE IT.
0075      CALL DPLY
0076 ;DISPLAY AND PAUSE.
0077      CALL RESR
0078 ;RESTORE REGISTERS.
0079      RET
0080 ;FINISH
0081 ;
0082 ;
0083 ;SAVE REGISTERS AND DISABLE
0084 ;INTERRUPTS FOR CALCULATIONS
0085 ;AND MOVES.
0086 SAVR DI
0087      EX   (SP),HL
0088 ;PUT RET ADDR INTO HL & SAVE
0089 ;HL - DOESN'T CHANGE SP.
0090      PUSH DE
0091      PUSH BC
0092      PUSH AF
0093      PUSH HL
0094 ;PUT RET ADDR. ON TOP.
0095 ;
0096 ;
0097 ;RESET HL TO ENTRY VALUE.
0098      LD   HL,11
0099 ;2 TIMES NO. OF REGS. + 3
0100      ADD  HL,SP
0101 ;POINT TO H-VALUE IN STACK.
0102      PUSH AF
0103 ;SAVE AF REG.
0104      LD   A,(HL)
0105 ;AND PUT IN A REG.
0106      DEC  HL
0107 ;NOW POINT TO L-VALUE.
0108      LD   L,(HL)
0109 ;AND PUT IN L REG.
0110      LD   H,A
0111 ;MOVE H-VALUE.
0112      POP  AF
0113 ;RESTORE AF REG.
0114      RET
0115 ;
0116 ;
0117 ;RESTORE REGISTERS AND
0118 ;ENABLE INTERRUPTS FOR
0119 ;RETURN TO BASIC.
0120 RESR POP  HL
```

```
0121 ;GET RET ADDR.
0122      POP  AF
0123      POP  BC
0124      POP  DE
0125      EX   (SP),HL
0126 ;RESTORE HL & PUT RET ADDR.
0127 ;ON STACK.
0128      EI
0129      RET
0130 ;
0131 ;
0132 ;SCREEN 1 - OPEN-UP.
0133 ;USE STACK TO STORE UPPER
0134 ;HALF POINTERS.
0135 ;USE IX AND IY REGS. TO
0136 ;STORE LOWER HALF POINTERS.
0137 SC1  CALL SAVR
0138 ;SAVE REGISTERS.
0139      PUSH IX
0140      PUSH IY
0141      LD   HL,SBF1+HSZC
0142 ;PT. TO START OF LOWER-HALF.
0143      LD   DE,SSCN+HSZC
0144 ;PT. TO CORRESPONDING DEST.
0145      PUSH HL
0146 ;PUT SOURCE HL INTO IX.
0147      POP  IX
0148      PUSH DE
0149 ;PUT DEST. DE INTO IY.
0150      POP  IY
0151      DEC  HL
0152 ;PT. TO END OF UPPER-HALF.
0153      DEC  DE
0154 ;PT. TO CORRESPONDING DEST.
0155      LD   B,20H
0156 ;HALF NO. OF SCREEN LINES.
0157 NLN1 PUSH BC
0158 ;SAVE LINE COUNTER.
0159      LD   BC,LLEN
0160 ;SIZE - 1 LINE.
0161      LDDR
0162 ;MOVE IT - UPPER HALF LINE.
0163      PUSH HL
0164 ;SAVE PTR. ON STACK.
0165      PUSH DE
0166 ;SAVE PTR. ON STACK.
0167      PUSH IX
0168 ;RESTORE LOWER HALF SOURCE.
0169      POP  HL
0170      PUSH IY
0171 ;RESTORE LOWER HALF DEST.
0172      POP  DE
0173      LD   BC,LLEN
0174 ;SIZE - 1 LINE.
0175      LDIR
0176 ;MOVE IT - LOWER HALF LINE.
0177      PUSH HL
0178      POP  IX
0179 ;PUT SOURCE HL INTO IX.
0180      PUSH DE
0181      POP  IY
0182 ;PUT DEST. DE INTO IY.
0183      CALL DPLY
0184 ;DISPLAY AND PAUSE.
0185      POP  DE
0186 ;RESTORE UPPER HALF PTRS.
0187      POP  HL
0188      POP  BC
0189 ;RESTORE LINE COUNTER.
0190      DJNZ NLN1
0191 ;WHOLE SCREEN MOVED?
0192      POP  IY
0193      POP  IX
0194      CALL RESR
0195 ;RESTORE REGS.
0196      RET
0197 ;FINISH.
0198 ;
0199 ;
0200 ;SCREEN 2 - ROLL DOWN.
0201 ;NOTE THAT SCREENS 2 AND 3
0202 ;ARE INTERCHANGED IN
0203 ;DISPLAY SEQUENCE.
0204 SC2  CALL SAVR
0205 ;SAVE REGS.
0206      LD   HL,SBF3
0207 ;SOURCE.
0208      LD   DE,SSCN
0209 ;DESTINATION.
0210      LD   B,NLIN
0211 ;LINE COUNTER.
0212 NLN2 PUSH BC
0213 ;SAVE LINE COUNTER.
0214      LD   BC,LLEN
0215 ;SIZE - ONE FULL LINE.
0216      LDIR
0217 ;MOVE IT.
0218      CALL DPLY
0219 ;DISPLAY AND PAUSE.
0220      POP  BC
0221 ;RESTORE LINE COUNTER.
0222      DJNZ NLN2
0223 ;SCREEN FULL?
0224      CALL RESR
0225 ;RESTORE REGS.
0226      RET
0227 ;FINISH
0228 ;
0229 ;
0230 ;SCREEN 3 - PUSH DOWN.
0231 SC3  CALL SAVR
0232 ;SAVE REGS.
0233      LD   HL,SBF4-1
0234 ;SOURCE - END OF SBF3.
0235      LD   B,NLIN+1
0236 ;LINE COUNTER.
0237 NSN3 PUSH BC
0238 ;SAVE LINE COUNTER.
0239      LD   DE,ESCN-1
0240 ;DESTINATION - END OF SCREEN
```

```
0241      LD   BC,SZSC
0242 ;SIZE - SCREEN FULL.
0243      LDDR
0244 ;MOVE IT.
0245      LD   BC,SZSC-LLEN
0246 ;1 SCREEN FULL LESS 1 LINE.
0247      ADD  HL,BC
0248 ;RESET SOURCE ONE LINE ON.
0249      CALL DPLY
0250 ;DISPLAY AND PAUSE.
0251      POP  BC
0252 ;RESTORE LINE COUNTER.
0253      DJNZ NSN3
0254 ;WHOLE SCREEN MOVED?
0255      CALL RESR
0256 ;RESTORE REGS.
0257      RET
0258 ;FINISH
0259 ;
0260 ;
0261 ;SCREEN 4 - ROLL UP.
0262 SC4  CALL SAVR
0263 ;SAVE REGS.
0264      LD   HL,SBF5-1
0265 ;SOURCE - END OF SBF4.
0266      LD   DE,ESCN-1
0267 ;DEST. - END OF SCREEN.
0268      LD   B,NLIN
0269 ;LINE COUNTER.
0270 NLN4 PUSH BC
0271 ;SAVE LINE COUNTER.
0272      LD   BC,LLEN
0273 ;SIZE - 1 LINE.
0274      LDDR
0275 ;MOVE IT.
0276      CALL DPLY
0277 ;DISPLAY AND PAUSE.
0278      POP  BC
0279 ;RESTORE LINE COUNTER.
0280      DJNZ NLN4
0281 ;SCREEN FULL?
0282      CALL RESR
0283 ;RESTORE REGS.
0284      RET
0285 ;FINISH
0286 ;
0287 ;
0288 ;SCREEN 5 - PUSH UP.
0289 SC5  CALL SAVR
0290 ;SAVE REGS.
0291      LD   HL,SBF5-1
0292 ;SOURCE - END OF SBF4.
0293      LD   B,NLIN+1
0294 ;LINE COUNTER.
0295 NSN5 PUSH BC
0296 ;SAVE LINE COUNTER.
0297      LD   DE,ESCN-1
0298 ;DESTINATION - END OF SCREEN
0299      LD   BC,SZSC
0300 ;SIZE - SCREEN FULL.
0301      LDDR
0302 ;MOVE IT.
0303      LD   BC,SZSC+LLEN
0304 ;1 SCREEN FULL PLUS 1 LINE.
0305      ADD  HL,BC
0306 ;RESET SOURCE ONE LINE BACK.
0307      CALL DPLY
0308 ;DISPLAY AND PAUSE.
0309      POP  BC
0310 ;RESTORE LINE COUNTER.
0311      DJNZ NSN5
0312 ;WHOLE SCREEN MOVED?
0313      CALL RESR
0314 ;RESTORE REGS.
0315      RET
0316 ;FINISH.
0317 ;
0318 ;
0319 ;SCREEN 6 - 4 BAR ROLL DOWN.
0320 SC6  CALL SAVR
0321 ;SAVE REGS.
0322      LD   HL,SBF6
0323 ;SOURCE - START OF SBF6.
0324      LD   DE,SSCN
0325 ;DESTINATION - START OF SCRN
0326      LD   B,10H
0327 ;NO. OF LINES/BAR.
0328 NBR6 PUSH BC
0329 ;SAVE LINE COUNTER.
0330      LD   B,4H
0331 ;NO. OF BARS.
0332 NLN6 PUSH BC
0333 ;SAVE BAR COUNTER.
0334      LD   BC,LLEN
0335 ;SIZE - 1 LINE.
0336      LDIR
0337 ;MOVE IT.
0338      LD   BC,200H-LLEN
0339 ;INC. FOR START OF NEXT BAR.
0340      ADD  HL,BC
0341 ;POINT TO START OF NEXT BAR.
0342      EX   DE,HL
0343 ;SWAP SOURCE AND DEST.
0344      ADD  HL,BC
0345 ;POINT TO START OF NEXT BAR.
0346      EX   DE,HL
0347 ;SWAP DEST AND SOURCE.
0348      POP  BC
0349 ;RESTORE BAR COUNTER.
0350      DJNZ NLN6
0351 ;4 BARS DONE?
0352      LD   BC,SZSC-LLEN
0353 ;DEC. FOR NEXT LINE.
0354      OR   A
0355 ;RESET C-FLAG.
0356      SBC  HL,BC
0357 ;POINT TO NEXT SOURCE LINE.
0358      EX   DE,HL
0359 ;SWAP SOURCE AND DEST.
0360      OR   A
```

```
0361 ;RESET C-FLAG.
0362      SBC  HL,BC
0363 ;POINT TO DEST.
0364      EX   DE,HL
0365 ;SWAP DEST AND SOURCE.
0366      CALL DPLY
0367 ;DISPLAY AND PAUSE.
0368      POP  BC
0369 ;RESTORE LINE COUNTER.
0370      DJNZ NBR6
0371 ;SCREEN FINISHED?
0372      CALL RESR
0373 ;RESTORE REGS.
0374      RET
0375 ;FINISH.
0376 ;
0377 ;
0378 ;SCREEN 7 - L TO R SWEEP.
0379 SC7  CALL SAVR
0380 ;SAVE REGS.
0381      PUSH IX
0382      PUSH IY
0383      LD   IX,SBF7
0384 ;POINT TO INCOMING BYTE.
0385      LD   IY,SSCN
0386 ;POINT TO REPLACED BYTE.
0387      LD   B,LLEN
0388 ;SET COLUMN COUNTER.
0389 NCL7 PUSH BC
0390 ;SAVE COLUMN COUNTER.
0391      LD   H,0FFH
0392 ;PIXEL MASK TEMPLATE.
0393      LD   B,4
0394 ;SET PIXEL COUNTER.
0395 NPX7 PUSH BC
0396 ;SAVE PIXEL COUNTER.
0397      SRL  H
0398 ;SHIFT MASK FOR RH. PIXEL
0399      SRL  H
0400 ;PRESERVATION IN H-REG.
0401      LD   A,H
0402 ;PUT MASK INTO ACC.
0403      CPL
0404 ;.NOT.MASK IN ACC.
0405      LD   L,A
0406 ;NOT.MASK IN L-REG. FOR
0407 ;LH. PIXEL PRESERVATION.
0408      LD   B,NLIN
0409 ;SET LINE COUNTER.
0410 NLN7 LD   A,(IX+ZERO)
0411 ;PUT INCOMING BYTE INTO ACC.
0412      AND  L
0413 ;MASK OUT RH. PIXELS.
0414      LD   D,A
0415 ;SAVE LH. PIXELS.
0416      LD   A,(IY+ZERO)
0417 ;PUT REPLACED BYTE INTO ACC.
0418      AND  H
0419 ;MASK OUT LH. PIXELS.
0420      OR   D
0421 ;LOGICAL ADD RH & LH PIXELS.
0422      LD   (IY+ZERO),A
0423 ;UPDATE SCREEN.
0424      LD   DE,LLEN
0425 ;INC. BY 1 LINE.
0426      ADD  IX,DE
0427 ;POINT TO NEXT LINE/INCOMING
0428      ADD  IY,DE
0429 ;POINT TO NEXT LINE/REPLACED
0430      DJNZ NLN7
0431 ;SEE IF LINES FINISHED?
0432      CALL DPLY
0433 ;DISPLAY AND PAUSE.
0434      LD   DE,BIG-SZSC
0435 ;DEC. TO RETURN TO TOP OF
0436 ;CURRENT COLUMN.
0437      ADD  IX,DE
0438 ;POINT TO TOP OF CURRENT COL
0439      ADD  IY,DE
0440 ;POINT TO TOP OF CURRENT COL
0441      POP  BC
0442 ;RESTORE PIXEL COUNTER.
0443      DJNZ NPX7
0444 ;SEE IF ALL PIXELS FINISHED?
0445      INC  IX
0446 ;POINT TO NEXT COLUMN.
0447      INC  IY
0448 ;POINT TO NEXT COLUMN.
0449      POP  BC
0450 ;RESTORE COLUMN COUNTER.
0451      DJNZ NCL7
0452 ;SEE IF COLUMNS FINISHED?
0453      POP  IY
0454      POP  IX
0455      CALL RESR
0456 ;RESTORE REGS.
0457      RET
0458 ;FINISH.
0459 ;
0460 ;
0461 ;SCREEN 8 - R TO L SWEEP.
0462 SC8  CALL SAVR
0463      PUSH IX
0464      PUSH IY
0465      LD   IX,SBF8+1FH
0466 ;TOP OF R.H. COL.
0467      LD   IY,SSCN+1FH
0468 ;TOP OF RH. COL. ON SCREEN.
0469      LD   B,LLEN
0470 NCL8 PUSH BC
0471      LD   H,0FFH
0472      LD   B,4
0473 NPX8 PUSH BC
0474      SLA  H
0475      SLA  H
0476      LD   A,H
0477      CPL
0478      LD   L,A
0479      LD   B,NLIN
0480 NLN8 LD   A,(IX+ZERO)
```

```
0481        AND  L
0482        LD   D,A
0483        LD   A,(IY+ZERO)
0484        AND  H
0485        OR   D
0486        LD   (IY+ZERO),A
0487        LD   DE,LLEN
0488        ADD  IX,DE
0489        ADD  IY,DE
0490        DJNZ NLN8
0491        CALL DPLY
0492        LD   DE,BIG-SZSC
0493        ADD  IX,DE
0494        ADD  IY,DE
0495        POP  BC
0496        DJNZ NPX8
0497        DEC  IX
0498        DEC  IY
0499        POP  BC
0500        DJNZ NCL8
0501        POP  IY
0502        POP  IX
0503        CALL RESR
0504        RET
0505 ;
0506 ;
0507 ;MOVE SCREEN BUFFER TO VRAM.
0508 ;DO IT IN TWO HALVES AS THE
0509 ;PROCEDURE IS INTERRUPT
0510 ;DRIVEN AND MUST BE
0511 ;ACCOMPLISHED IN 4.49 MSECS.
0512 ;TO AVOID FLICKER.
0513 ;1K BLOCK MOVE TAKES
0514 ;6.09 MSECS. ON 3.54MHZ Z80.
0515 ;(NEAR ENOUGH!)
0516 ;
0517 MTOP LD   HL,SSCN
0518        LD   DE,VRAM
0519        LD   BC,HSZC
0520        LDIR
0521 ;MOVE TOP HALF SCREEN BUFFER
0522        DI
0523        LD   BC,MBOT
0524 ;SWAP INTERRUPT VECTOR
0525 ;TO OTHER HALF.
0526        LD   (IVEC+1),BC
0527        EI
0528        RET
0529 ;
0530 ;
0531 MBOT LD   HL,SSCN+HSZC
0532        LD   DE,VRAM+HSZC
0533        LD   BC,HSZC
0534        LDIR
0535 ;MOVE BOTTOM HALF SCRN. BUF.
0536        DI
0537        LD   A,TURN
0538        LD   (IVEC),A
0539 ;SET INTERRUPT VECTOR TO RET
0540 ;AS BOTH HALVES ARE MOVED.
0541        EI
0542        RET
0543 ;
0544 ;
0545 ;INTERRUPT DRIVEN DISPLAY
0546 ;ROUTINE. A PAUSE IS DONE
0547 ;SO THAT THE TOP AND BOTTOM
0548 ;HALVES OF THE SCREEN CAN BE
0549 ;MOVED FROM THE SCREEN
0550 ;BUFFER TO VRAM.
0551 ;NB. BC REG. IS CHANGED BY
0552 ;THIS SUBROUTINE.
0553 DPLY LD   A,JMP
0554        LD   BC,MTOP
0555        LD   (IVEC+1),BC
0556        LD   (IVEC),A
0557 ;SETUP INTERRUPT VECTOR.
0558        EI
0559        LD   BC,DURD
0560 ;DELAY MSEC.
0561        CALL DLAY
0562 ;DO A DELAY - DURING WHICH
0563 ;TIME THE VRAM IS UPDATED.
0564        DI
0565        RET
0566 ;RETURN TO MOVE ROUTINES.
0567 END  EQU  $
```

SUPER ORGAN

By Peter Shaw

In this programme all the keys produce single notes. I have added two new notes, a high 'D' and an 'E' above that. You can stop the programme by using the colon [:] key.

```
10 REM SUPER ORGAN
20 INPUT "ENTER A NUMBER (1 TO 9)";A
25 IF A<1 OR A>9 THEN 20
30 C$=INKEY$
40 IF C$="Z" THEN SOUND 4,A
45 C$=INKEY$
50 IF C$="X" THEN SOUND 6,A
55 C$=INKEY$
60 IF C$="C" THEN SOUND 8,A
65 C$=INKEY$
70 IF C$="V" THEN SOUND 9,A
75 C$=INKEY$
80 IF C$="B" THEN SOUND 11,A
85 C$=INKEY$
90 IF C$="N" THEN SOUND 13,A
95 C$=INKEY$
100 IF C$="M" THEN SOUND 15,A
105 C$=INKEY$
110 IF C$="," THEN SOUND 16,A
115 C$=INKEY$
120 IF C$="." THEN SOUND 18,A
125 C$=INKEY$
130 IF C$="(space)" THEN SOUND 20,A
135 C$=INKEY$
140 IF C$=":" THEN END
145 GOTO 30
```

Here, finally, is the 'music' for CLICK GO THE SHEARS, to be played on the SUPER ORGAN.

```
C C X Z C B , , M N B B N B C Z X X C X C
C X Z C B , , M N . , M N B V C X Z , , ,
                [chorus]
. . , M . , SPACE , N N M , N N B , C X X
C C C X Z C B , , , M N N . , M N B V C X
Z , , ,
```

Editors note.
This programme is reprinted from the VZ200 interface magazine 1983
I would be interested in seeing your versions of this piano/organ program.
I will print the best ones in the newsletter if any are sent.

Conversion of TRS 80 / System 80 tape files to VZ

By Ken Clarke with information supplied by Peter Patterson.

There is a very useful utility tape available for this purpose called XX-80. However a caution should be noted re its use. The utility requires to be CLOADed from tape only and on a VZ-200 only.

I am not certain why, however it has been suggested that it maybe caused by the fact that the clock frequencies of the VZ-200 and VZ-300 are slightly different and this could be effecting the critical timing of the utility's functions.

But aside from this malady, - does anyone have any TRS 80 / System 80 tapes that could be suitable for the VZ ?.

HARDWARE

This edition sees a contribution from a user. Although it isn't a hardware modification, but rather a small BASIC program, I felt its subject may be of interest to hackers anyway. Anyone who enjoys butchering their VZ must like building their own loudspeakers!

TUNING A SPEAKER BOX WITH YOUR VZ by Phil Allison

This short BASIC program for the VZ computer will design the size of a vent needed in a bass reflex enclosure to tune it to a given frequency. It calculates the length of vent from the given diameter, box volume and box frequency. Also the tuning frequency of an existing design can be found from the cabinet volume and vent dimensions.

Surprising to some possibly is the fact that woofer size or type does not affect the frequency of a tuned box so no woofer data is needed for this program.

If the program gives a vent length of about 20mm then just a hole in the baffle is needed. Remember, however, that any vent should have a diameter not less than one quarter of the woofer diameter or air velocity in the vent becomes excessive.

For checking an existing design press RETURN when "BOX FREQ. HZ...?" appears. This frequency is then calculated using the other data. If "NEW VENT DIAMETER MM. ?" appears then enter a new larger diameter and try again, since the desired frequency cannot be achieved with the previous value.

```
10 CLS:PRINT
30 PRINT"  PROGRAM TO CALCULATE VENTED"
35 PRINT"        BOX PARAMETERS"
40 PRINT"  ****************************":PRINT:PRINT
50 INPUT" BOX VOLUME LITRES ";VB:PRINT:IFVB<=0THEN50
60 INPUT" VENT DIAMETER MM. ";D:PRINT:IFD<=0THEN60
61 IFFB>0THEN100
70 INPUT" BOX FREQ. HZ .....";FB:PRINT:IFFB<0THEN70
71 IFFB>0THEN100
80 INPUT" VENT LENGTH MM ...";L:PRINT:IFL<0THEN80
90 IF FB=0THEN130
100 L=2360*D^2/(VB*FB^2)- 8*D:IFL<0THENPRINT" NEW";:GOTO60
101 PRINT:PRINT
110 PRINT" VENT LENGTH  MM:  ";:PRINTUSING"####.#";L
111 PRINT" VENT AREA SQ.CM:  ";:PRINTUSING"####.#";7.85E-3*D^2
112 GOTO150
130 FB=((2360*D^2)/((L+.8*D)*VB))^0.5:PRINT:PRINT
140 PRINT" BOX FREQ. HZ:     ";:PRINTUSING"###.#";FB
150 PRINT" ==========================":FB=0
160 PRINT:PRINT:GOTO50
```

"HELMETIZE NEW ZEALAND CAMPAIGN"

N.Z. ROAD SAFETY ASSOCIATION (INC.)

In 1988 delegates to the Association's Rotorua National Conference agreed to promote cycle helmets nationwide in an effort to reduce brain damage, particularly in the vulnerable young. Since then $160,000 to $180,000 has been raised by the Association through its members.

We have appreciated the co-operation and untiring efforts of "The Helmet Lady", Mrs Rebecca Oaten, in visiting schools nationwide. Week-long itineraries have been sponsored largely by local firms and hotels with travel assistance kindly offered by the MOT and Air New Zealand. Recent tours including Whangarei and Taranaki were very well received and forthcoming visits in April/May to the West Coast and Canterbury are planned.

The "Heroes Wear Helmets" theme started with an address in Ashburton for Road Safety Awareness Week 1989, which led to a large "Heroes" advertisement in all Community Newspaper Assn papers (to 1.8 million homes) sponsored by Toyota for Road Safety Awareness Week 1990.

THE BRAIN

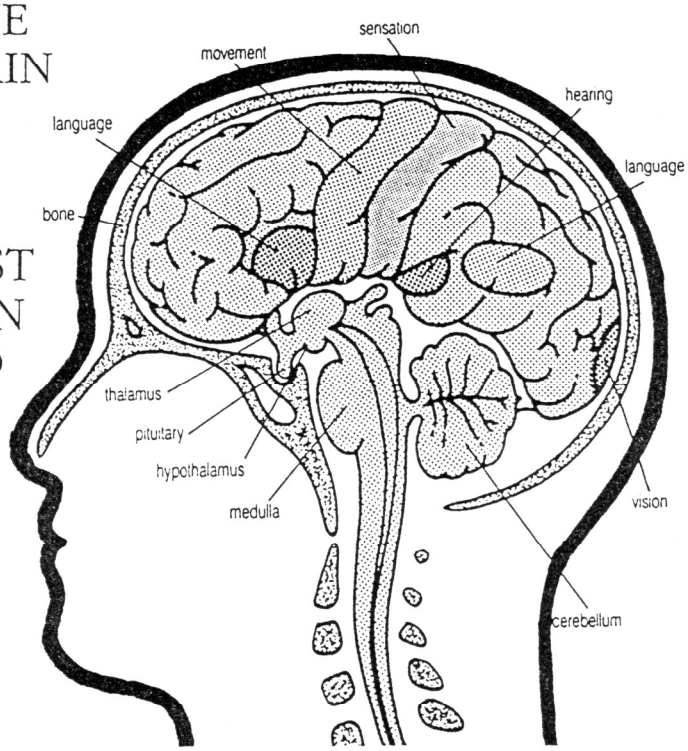

THE GREATEST COMPUTER IN THE WORLD

HELMET IT

Rebecca Oaten holds what's left of a Standards Approved helmet. It saved the life of a student who fell off his bike cycling down a hill. Both his brake cables snapped and the teenager was thrown head-first against the kerb on the opposite side of the road. The helmet, although smashed, absorbed the impact. The boy spent a week in hospital under observation. Doctors could not believe he was uninjured.

Mini-posters of our "Heroes Wear Helmets" advertisement and the "Brain" were distributed to all Secondary and composite Schools throughout New Zealand. Members attending the Playcentre Conference were also impressed with the "Heroes" theme and delighted with the "Mothers are Heroes Too" version, which, along with the "Brain" were distributed to all 630 centres.

The first four sporting heroes were all men, owing to New Zealand sports personalities inaccessibility in competition overseas. Our advertisement for the secondary school paper "Tearaway" (sponsored by the MOT) included two women sports personalities, and resulted in another successful mini-poster for distribution.

While searching for sponsorship for the original advertisement Shell indicated their interest in the stickers concept, and our 100,000 sets of six sporting heroes were produced and distributed New Zealand wide. The feedback from these was such that Shell are to sponsor 17,000 similar posters for all educational levels from pre-school to tertiary, to be distributed through the "Parent and School" magazine.

We are most appreciative to our sponsors, Toyota, Shell and the MOT. The willing co-operation of Chris Amon, Martin Crowe,

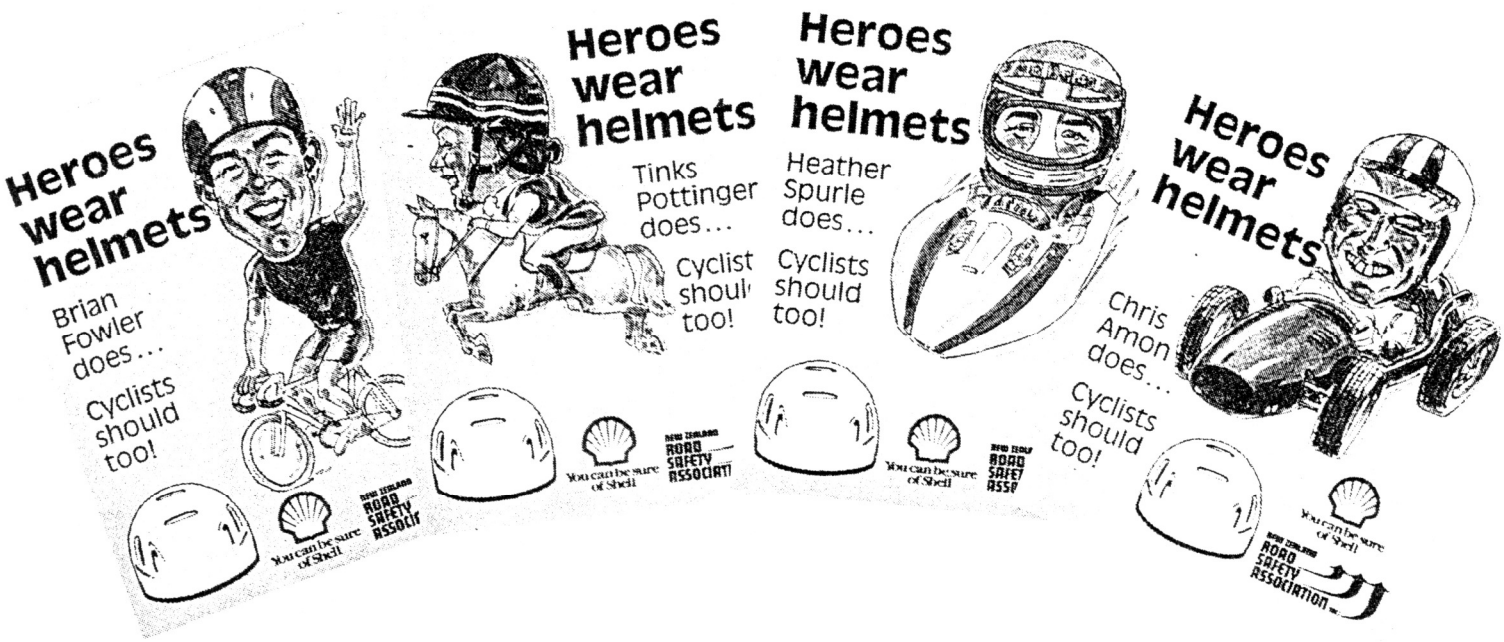

Brian Fowler, Tinks Pottinger, Heather Spurle and Mark Todd in supporting the campaign is acknowledged with grateful thanks. Without them the "Heroes Wear Helmets" theme could not have been possible.

Other promotions have taken various forms:

- Helmets subsidised, donated or given as prizes.
- Radio breakfast programmes and contests.
- Newspaper features.
- Hundreds of school children wearing helmets in processions.
- School holiday programmes, bikathons, rodeos.
- Safe Cycling and Young Cyclist of the Year competitions.
- Free cycle checks.
- Quizzes — school or public.

- Cycle helmet promotion video.
- "Good Kid" and "Catch Me While I'm Good" spotting.
- Displays — posters, static with good and bad cycles, victims without helmets etc.
- Poster and colouring competitions with helmets as the theme.

These are just some of the activities carried out by our member Road Safety Councils. With their efforts and the New Zealand-wide "Heroes Wear Helmets" programme we feel we have made a major contribution to the increase in helmet wearing.

Nationally we are now adopting Driver Attitudes as our theme, with the Drunk and Drugged Driver our first target group.

Our grateful thanks to financial contributors for 1990/91.

Sponsors
Toyota NZ Ltd
Shell NZ Ltd
Ministry of Transport

Grants
Ministry of Transport
J.R. McKenzie Trust
J.B.S. Dudding Trust
Todd Foundation
Ferrier Trust

Corporate Donors
DB Kiwi
Mobil Oil
Southland Construction Ltd, Invercargill
Hawera High School
Craig's Panel Beaters, Manaia, Tara
Wyndham UFS Pharmacy
J.W. & C.T. Bailey, New Plymouth
Crarer Construction Ltd, Wairoa
Combustion & Plant Services, Te Puke

PLEASE SUPPORT THOSE WHO CARE ABOUT ROAD SAFETY.

DON'T TAKE THE ROAD TOLL LYING DOWN — IN A COFFIN